YEF750 SERIES 750W



RoHS (Pending)

YEF series is one of enclosed fanless semi-potted ultra narrow AC-DC switching , power supply Adopting the full range 90~264VAC input.

The series cost-effective, high PF value, high efficiency, high reliability,operates from -30℃ ~70℃ underl air convection without fan.

These converfers offer excellent EMC performance and meet internation standards , they are widely used in areas of industriai, ighting, electricity, security, telecommunications, smart home etc.

Features

- Universal AC Input/ Full Range
- Semi-Potted Process, Fanless Design
- Built-in active PFC function
- Low Ripple & Noise, high efficiency
- Protection:Short Circuit/Overload/ Over Voltage/Over Temperature
- Three Years Warranty

Model Information

Yingjiao Part Number	DC Voltage	Rated Current	Rated Power	VOLTAGE ADJ.RANGE	MAX.Capactive Load
YEF750-12☐	12V	60A	720W	12~14.4V	12000uF
YEF750-24☐	24V	31.3A	751.2W	24~28.8V	10000uF
YEF750-36☐	36V	20.9A	752.4W	36~43.2V	8000uF
YEF750-48☐	48V	15.7A	753.6W	48~57.6V	6000uF

Model Encoding

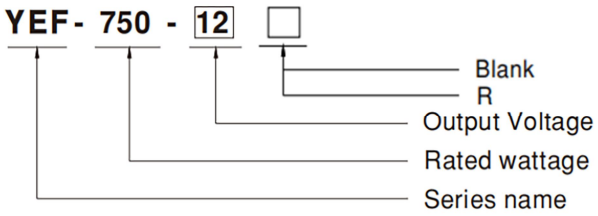

Type	Description
Blank	Enclosed
R	Buit-in DC OK active signed and redundant function

Input

VOLTAGE RANGE	90~264VAC	
	127~370VDC	
FREQUENCY RANGE	47-63Hz	
POWER FACTOR (Typ.)	PF≥0.95/230VAC,	
	PF≥0.98/115VAC at full load	
AVERAGE EFFICIENCY(Typ.)	93.5%	YEF750-12
	95%	YEF750-24
	95%	YEF750-36
	95%	YEF750-48
AC CURRENT(Typ.)	7.5A/115VAC	
	3.8A/230VAC	
INRUSH CURRENT(Typ.)	Cold start 20A/115VAC	
	40A/230VAC	
LEAKAGE CURRENT	<0.75mA/240VAC	

Output

RIPPLE & NOSE(max.)	150mVp-p	YEL750-12
	200mVp-p	YEF750-24
	250mVp-p	YEF750-36
	250mVp-p	YEF750-48
VOLTAGE TOLERANCE	±1.0%	
LINE REGULATION	±0.5%	
LOAD REGULATION	±0.5%	
SETUP,RISE TIME	1000ms, 50ms/230VAC at full load	
	1000ms, 50ms/115VAC at full load	
HOLD UP TIME (Typ.)	12ms/230VAC at full load	
	12ms/115VAC at full load	

Protection

SHORT CIRCUIT	Protection type: Hiccup mode, recovers automatically
	after fault condition is removed
OVER LOAD	105%-150% Rated Output Power
	Protection type: Hiccup mode,
	recovers automatically after fault condition is removed
OVER VOLTAGE	12V:14.5~16V
	24V:29~33V
	36V:43.5~49V
	48V:59~66V
	Protection type: Shut down O/P voltage, re-power on to recover
OVER TEMPERATURE	Protection type: Shut down O/P voltage,
	recovers automatically after temperature goes down

Environment

WORKING TEMP.	-30 ℃ to +70 ℃ (Refer to "Derating Curve")
Working Humidity	20 ~ 90% RH Non-Condensing
STORAGE TEMP, HUMIDITY	-40℃ ~+85℃,10 ~ 95% RH non-condensing
TEMP. COEFFICIENT	± 0.03%/℃(0~50℃)
VIBRATION	10~ 500Hz, 5G 10min./1cycle, 60min. each along X, Y,Z axes
MTBF	100.9K hrs min. MIL-HDBK-217F (25℃)
OVER VOLTAGE CATEGORY	Ⅲ;According to EN62368-1,altitude up to 2000 meters
SAFETY PROTECTION	CLASS Ⅰ

SAFETY & EMC

SAFETY STANDARDS	BS EN/EN62368-1, EAC TP TC 004 approved
WITHSTAND VOLTAGE	I/P-O/P:3.75KVAC I/P-FG:2KVAC O/P-FG:1.25KVAC
ISOLATION RESISTANCE	I/P-O/P, I/P-FG, O/P-FG:100M Ohms/ 500VDC/25 ℃/70% RH
EMC EMISSION	Compliance to BS EN/EN55032 (CISPR32) Class B, BS EN/EN61000-3-2,-3,
EMC IMMUNITY	Compliance to BS EN/EN61000-4-2,3,4,5,6,8,11,BS EN/EN55035

Note

1.All parameters NOT specially mentioned are measured at 230VAC input, rated load and 25℃ of ambient temperature.

2.Ripple&noise are measured from peak to peak with band width limit of 20MHz(0.1uf and 47uf /50V parallel capacitor under DC output full load, AC nominal input 25 ℃ ambient temperature).

3.Tolerance :includes set up tolerance, line regulation and load regulation.

4.Derating may be needed under low input voltages. Please check the derating curve for more details.

5.The power supply is considered a component which will be installed into a final equipment. The final equipment must be re-confirmed that it still meets EMC directives. For guidance on how to perform these EMC tests, please refer to"EMI testing of component power supplies."

6.The ambient temperature derating of 5℃/1000m is needed for operating altitude greater than 2000m(6500ft).

Dimensions & Weight

Length:	237mm/9.33in
Width:	100mm/3.94in
Height:	41mm/1.61n
Weight:	1.5kg

Packing

Carton Size:	54 × 30 x 24 CM
	21.26 x 11.81 x9.45 in
Master Carton Quantities:	15pcs/Carton

Dimensions and Installation

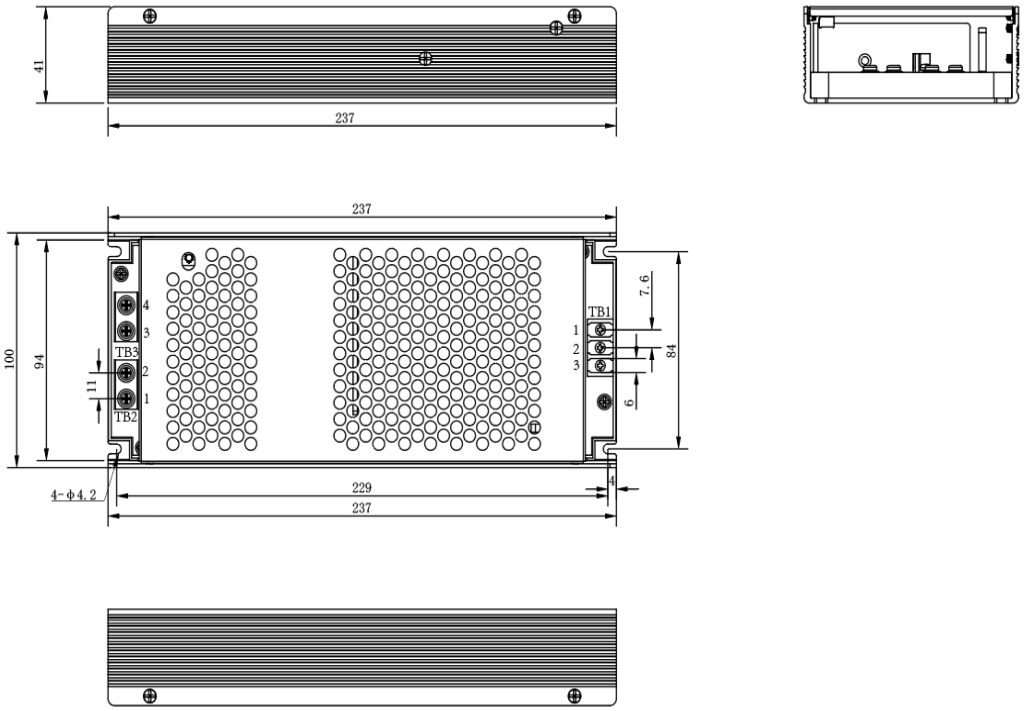

AC Input Terminal(TB1) pin NO. Assignment

Pin No.	Assignment
1	AC/L
2	AC/N
3	⏚

DC Output Terminal(TB2,TB3) pin NO. Assignment

Pin No.	Assignment
1,2	+V
3,4	-V

Block Diagram

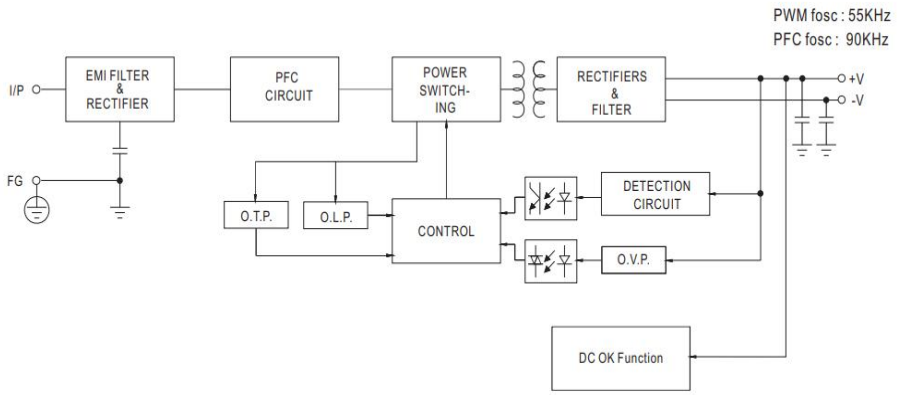

Deduction curve and temperature

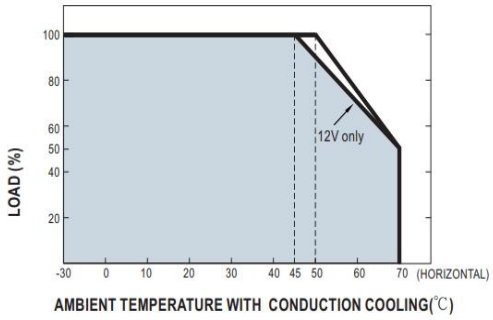

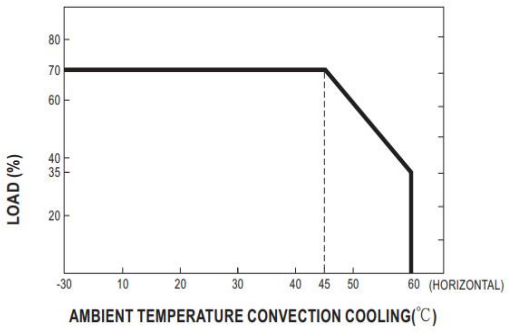

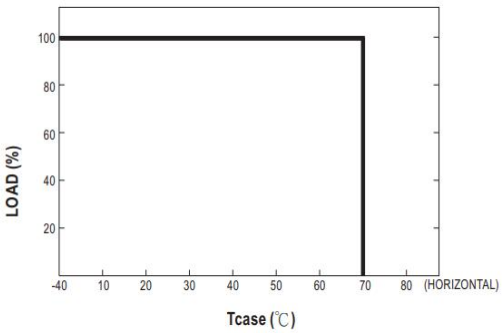

Minus output and input voltage curves

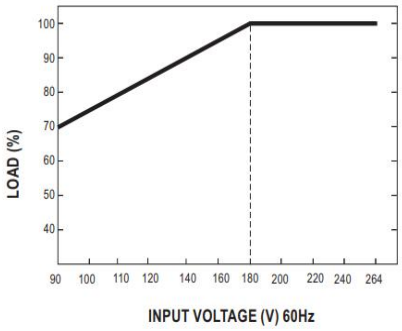

Efficiency Vs Load

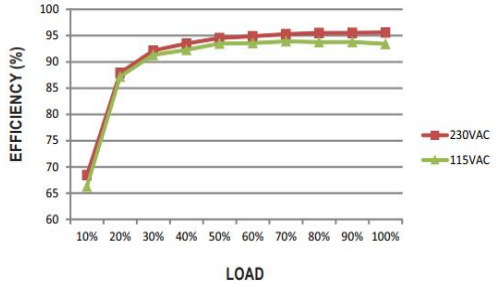

DC OK Relay Contact

Contact Close	PSU turns on/DC ok
Contact Open	PSU turns off/DC fail
Contact Rating(max.)	30Vdc/1A resistive load

Redundant function

(1)YEF Series is built-in redundant function and can be connected 2 units in parallel .
(2) When in parallel operation the maximum load should not be greater than the rated power of any PSU.

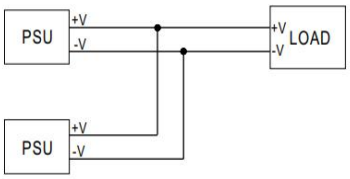

Installation Diagram

1.Operate with additional aluminum plate
In order to meet the"Derating Curve"and the "Static Characteristics",YEF series must be installed onto an aluminum plate(or the cabinet of the same size) on the bottom.The size of the suggested aluminum plate is shown as below. And for optimizing thermal performance,the aluminum plate must have an even and smooth surface (or coated with thermal grease), and YEF series must be firmly mounted at the center of the aluminum plate.
2. It is suggested to install the product with M3 combination screws, and the product must be firmly installed at the center of the aluminum plate.

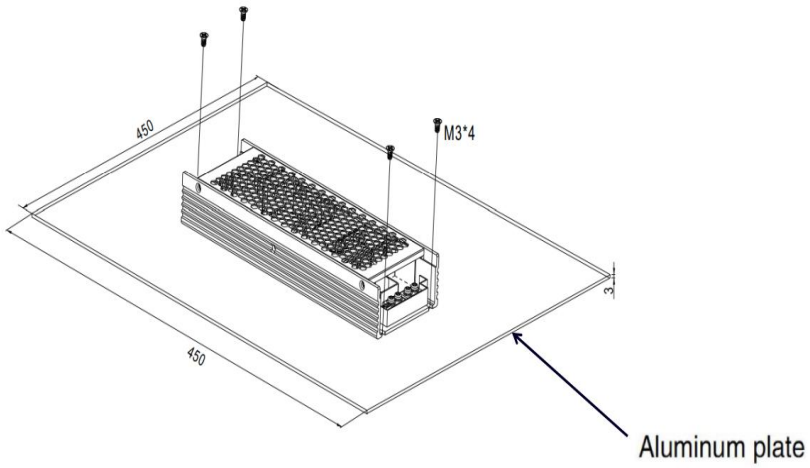

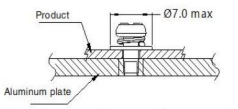

Position	Screw Spec.	Torque(max)
① – ④	M3	0.4N • m